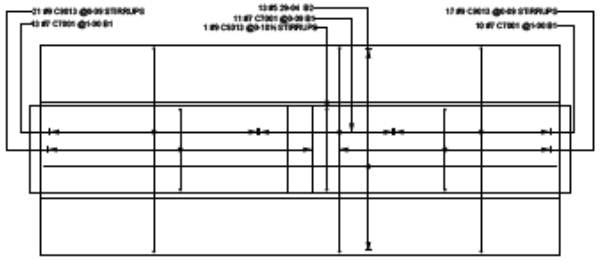

STIRRUPS,B1 & B2 BARS-PLAN VIEW

SCALE 1'-00=1/4

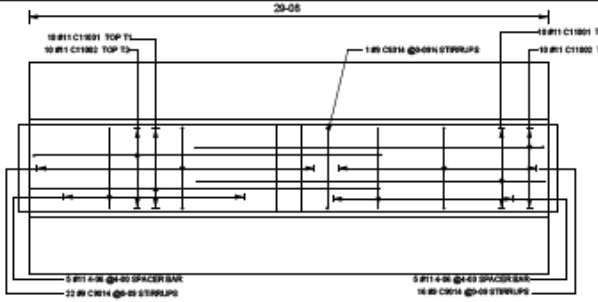

TOP T1, TOP T2 & STIRRUPS-PLAN VIEW

SCALE 1:1/4

BarMark	Qty.	Size	Length	Type	A	B	C	D	E	F	G	H	J	K	O	R
C11001	20	#11	21-11	2	2-00	19-11										
C11002	20	#11	21-06	1	1-07	19-11							1-03			
C5002	4	#9	16-02½	T9	1-03	13-04½					1-07					
C5003	8	#9	16-02	T9	1-03	13-04					1-07					
C5004	9	#9	16-01½	T9	1-03	13-03½					1-07					
C5005	10	#9	16-01	T9	1-03	13-03					1-07					
C5006	10	#9	16-00½	T9	1-03	13-02½					1-07					
C5007	9	#9	16-00	T9	1-03	13-02					1-07					
C5008	8	#9	15-11½	T9	1-03	13-01½					1-07					
C5009	8	#9	15-11	T9	1-03	13-01					1-07					
C5010	6	#9	15-10½	T9	1-03	13-00½					1-07					
C5011	4	#9	15-10	T9	1-03	13-00					1-07					
C5012	84	#9	13-11½	33		2-05½	10-03				1-03	1-05	1-00			
C5013	39	#9	24-04	17		9-10	4-06	9-10								
C5014	39	#9	21-06	17		9-05	4-06	8-05								
C5001	10	#8	31-10	2	1-04	29-02					1-04					
C5002	53	#8	19-08	56	1-04	2-08	11-06	3-08			1-04					
C7001	34	#7	13-02	T12	8-09	11-00					0-09					
C7002	53	#7	29-04	C29		7-10	1-09	11-06	1-09	7-10						
C5001	26	#5	9-04	17		3-05	4-06	2-05								
C5002	6	#5	15-00	17		1-09	11-06	1-09								
C5003	8	#5	14-08	2	0-10	13-00					0-10					
C5004	12	#5	0-10½	T9	0-05½	4-07					0-10					

BarMark	Qty.	Size	Length	Type	A	B	C	D	E	F	G	H	J	K	O	R
	10	#11	4-06	0		4-06										
	26	#7	29-04	0		29-04										
	19	#6	29-04	0		29-04										
	26	#6	3-10	0		3-10										
	4	#6	4-08	0		4-08										

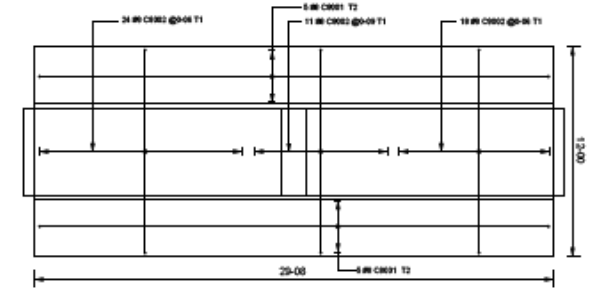

T1 & T2 BARS-PLAN VIEW

SCALE 1:1/4

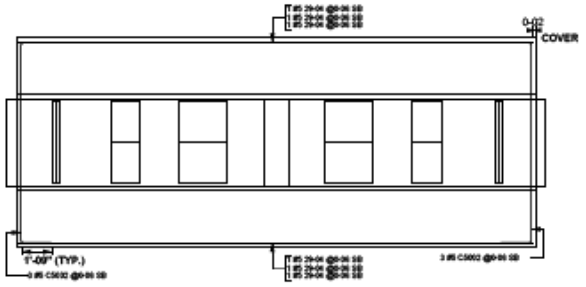

BOTTOM SIDE BARS-PLAN VIEW

SCALE 1:1/4

Type Bar Size	Number of Bars	Total Weight (lb)
#11	80	4848.00
#9	239	14216.53
#8	63	3832.96
#7	113	5648.68
#5	99	1238.04

Grand Total:		
	593	29675.95

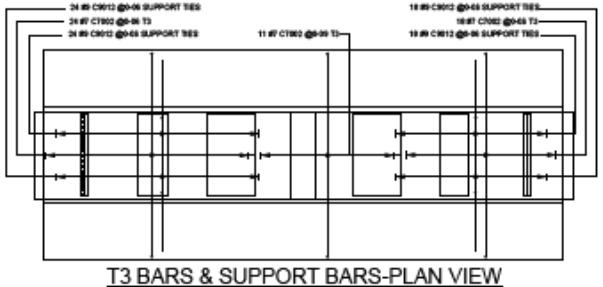

T3 BARS & SUPPORT BARS-PLAN VIEW

SCALE 1'-00=1/4

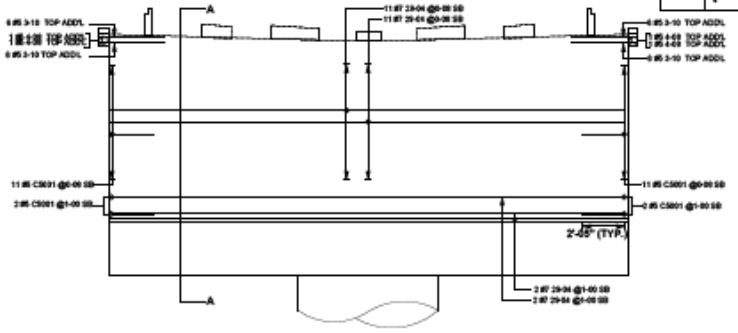

SIDE BARS & TOP ADD'L BARS- ELEVATION

SCALE 1:1/4

PIER LOCATION-109

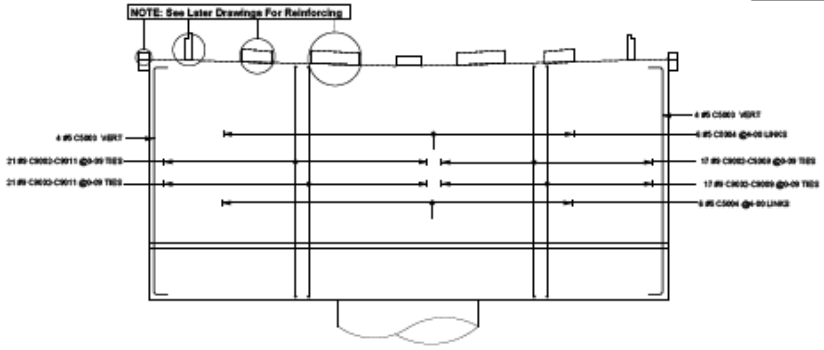

SIDE VERTICAL BARS & TIES - ELEVATION

SCALE 1:1/4

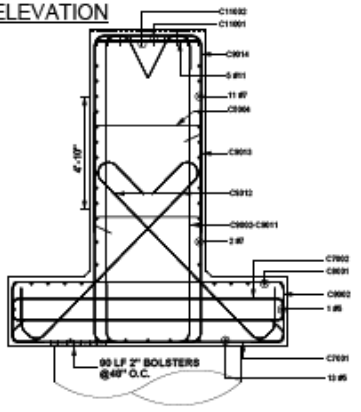

SECTION A-A

SCALE 1: 1/2

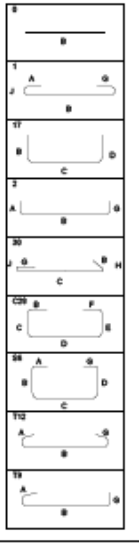

LEGEND:

1.TOP T1- TOP BAR 1ST LAYER

2.TOP T2- TOP BAR 2ND LAYER

3.TOP T3- TOP BAR 3RD LAYER

4.B1- BOT BAR 1ST LAYER

5.B2- BOT BAR SECOND LAYER

6.EF - EACH FACE

7.ES - EACH SIDE

8.SB-SIDE BARS

NOTES:

1.COVER = 2" ON ALL SIDES

2.ALL BARS TO BE ASTM-615-60 AND 60E FOR FOR EPOXY COATED BARS

3.DESIGN PACKAGE DP-030

ALL DIMENSIONS SHOWN ARE ASTM/ASTS (SPACE BELOW)

THIS IS A REPRESENTATION DRAWING ONLY. THIS DRAWING IS TO BE USED WITH THE CONTRACT DRAWINGS (ARCHITECTURAL, STRUCTURAL AND MEP) FOR BIDDING AND CONSTRUCTION PURPOSES. DRAWING ARE FOR DETAILING PURPOSES ONLY. DO NOT USE FOR OTHER TRADES. THIS DRAWING SHALL NOT BE SCALED.

NO.	DATE/DESIGN	APPROVAL	Redesign per DRC (LEVEL 2 SUP)
2	05/13/2024	APPROVAL	ISSUED FOR CONSTRUCTION
1	05/13/2024	APPROVAL	
0	05/01/24	APPROVAL	

SUBMITTED: | DATE: | SUBMITTED FOR: | COMMENTS:

#3 Bars	#5 Bars	#6 Bars	#7 Bars
#8 Bars	#9 Bars	#10 Bars	#11 Bars

#14 Bars	#18 Bars	#4 Bars	#4 Bars

DRAWING INDEX

CONTRACTOR:		DESIGNED:	ESC
DRAWN:		CHECKED:	ESC
APPROVED:		DATE:	
SCALE:			

CONTRACTOR: CAPITAL TOOL CRIB SERVICES

ADDRESS: PLANE 09 ENTER, NORTH DAL

DESCRIPTION: REINFORCEMENT DETAILS OF PIER TYPE H3

REV: H3-4-SE-03

KEY: 142243014

DRAWING: RSHC-05

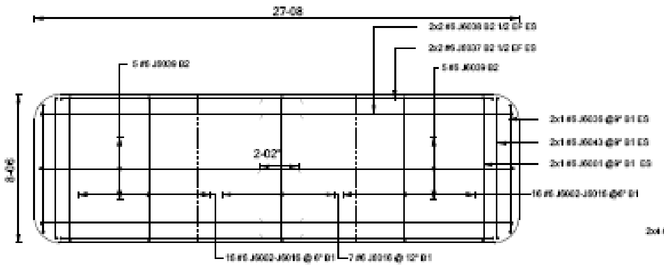

BOTTOM BARS-PLAN VIEW

SCALE: 1/4"=1'-0"

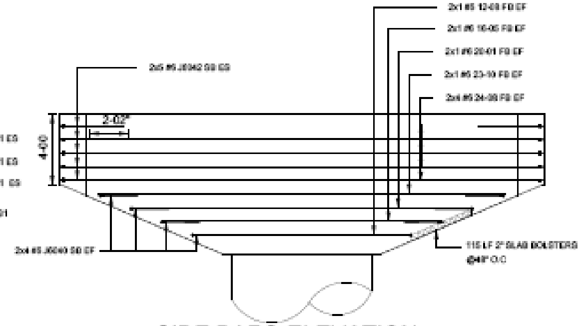

SIDE BARS-ELEVATION

SCALE: 1/4"=1'-0"

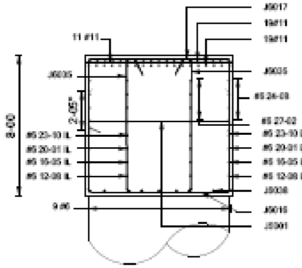

SECTION B-B

SCALE: 1/4"=1'-0"

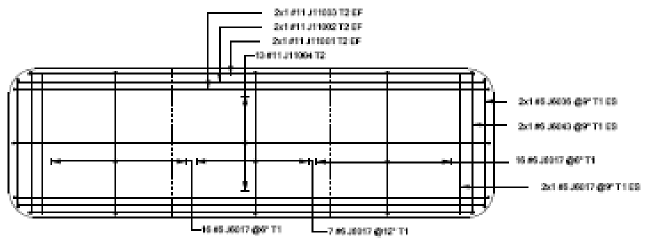

TOP T1 & T2 LAYER BARS-PLAN VIEW

SCALE: 1/4"=1'-0"

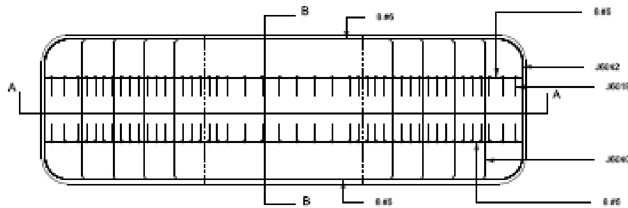

SIDE BARS-PLAN VIEW

SCALE: 1/4"=1'-0"

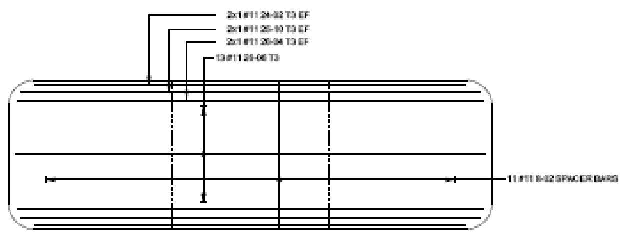

TOP T3 & SPACER BARS-PLAN VIEW

SCALE: 1/4"=1'-0"

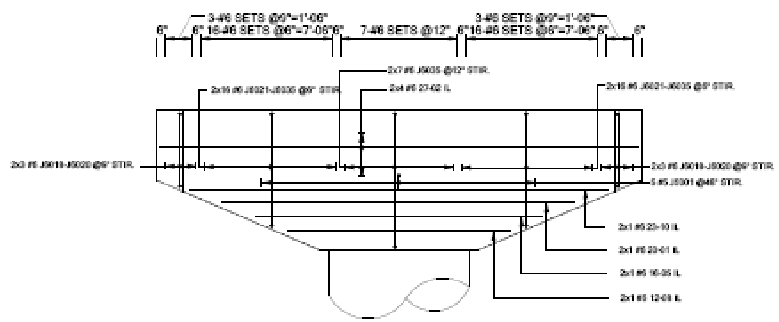

SECTION A-A

SCALE: 1/4"=1'-0"

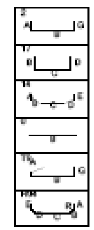

[illegible]	[illegible]	[illegible]	[illegible]	[illegible]	[illegible]	[illegible]	[illegible]	[illegible]	[illegible]	[illegible]	[illegible]	[illegible]	[illegible]	[illegible]	[illegible]	[illegible]
[illegible]	[illegible]	[illegible]	[illegible]	[illegible]	[illegible]	[illegible]					[illegible]					
[illegible]	[illegible]	[illegible]	[illegible]	[illegible]	[illegible]	[illegible]					[illegible]					
[illegible]	[illegible]	[illegible]	[illegible]	[illegible]	[illegible]	[illegible]					[illegible]					
[illegible]	[illegible]	[illegible]	[illegible]	[illegible]	[illegible]	[illegible]					[illegible]					
[illegible]	[illegible]	[illegible]	[illegible]	[illegible]		[illegible]	[illegible]	[illegible]								
[illegible]	[illegible]	[illegible]	[illegible]	[illegible]		[illegible]	[illegible]	[illegible]								
[illegible]	[illegible]	[illegible]	[illegible]	[illegible]		[illegible]	[illegible]	[illegible]								
[illegible]	[illegible]	[illegible]	[illegible]	[illegible]		[illegible]	[illegible]	[illegible]								
[illegible]	[illegible]	[illegible]	[illegible]	[illegible]		[illegible]	[illegible]	[illegible]								
[illegible]	[illegible]	[illegible]	[illegible]	[illegible]		[illegible]	[illegible]	[illegible]								
[illegible]	[illegible]	[illegible]	[illegible]	[illegible]		[illegible]	[illegible]	[illegible]								
[illegible]	[illegible]	[illegible]	[illegible]	[illegible]		[illegible]	[illegible]	[illegible]								
[illegible]	[illegible]	[illegible]	[illegible]	[illegible]		[illegible]	[illegible]	[illegible]								
[illegible]	[illegible]	[illegible]	[illegible]	[illegible]		[illegible]	[illegible]	[illegible]								
[illegible]	[illegible]	[illegible]	[illegible]	[illegible]		[illegible]	[illegible]	[illegible]								
[illegible]	[illegible]	[illegible]	[illegible]	[illegible]		[illegible]	[illegible]	[illegible]								
[illegible]	[illegible]	[illegible]	[illegible]	[illegible]		[illegible]	[illegible]	[illegible]								
[illegible]	[illegible]	[illegible]	[illegible]	[illegible]		[illegible]	[illegible]	[illegible]								
[illegible]	[illegible]	[illegible]	[illegible]	[illegible]		[illegible]	[illegible]	[illegible]								
[illegible]	[illegible]	[illegible]	[illegible]	[illegible]		[illegible]	[illegible]	[illegible]								
[illegible]	[illegible]	[illegible]	[illegible]	[illegible]		[illegible]	[illegible]	[illegible]								
[illegible]	[illegible]	[illegible]	[illegible]	[illegible]	[illegible]	[illegible]					[illegible]					
[illegible]	[illegible]	[illegible]	[illegible]	[illegible]	[illegible]	[illegible]					[illegible]					
[illegible]	[illegible]	[illegible]	[illegible]	[illegible]	[illegible]	[illegible]					[illegible]					
[illegible]	[illegible]	[illegible]	[illegible]	[illegible]	[illegible]	[illegible]					[illegible]					
[illegible]	[illegible]	[illegible]	[illegible]	[illegible]	[illegible]	[illegible]					[illegible]					
[illegible]	[illegible]	[illegible]	[illegible]	[illegible]	[illegible]	[illegible]					[illegible]					
[illegible]	[illegible]	[illegible]	[illegible]	[illegible]	[illegible]	[illegible]					[illegible]					
[illegible]	[illegible]	[illegible]	[illegible]	[illegible]	[illegible]	[illegible]					[illegible]					
[illegible]	[illegible]	[illegible]	[illegible]	[illegible]	[illegible]	[illegible]					[illegible]					
[illegible]	[illegible]	[illegible]	[illegible]	[illegible]	[illegible]	[illegible]					[illegible]					
[illegible]	[illegible]	[illegible]	[illegible]	[illegible]	[illegible]	[illegible]					[illegible]					
[illegible]	[illegible]	[illegible]	[illegible]	[illegible]	[illegible]	[illegible]					[illegible]					
[illegible]	[illegible]	[illegible]	[illegible]	[illegible]	[illegible]	[illegible]					[illegible]					
[illegible]	[illegible]	[illegible]	[illegible]	[illegible]	[illegible]	[illegible]					[illegible]					
[illegible]	[illegible]	[illegible]	[illegible]	[illegible]	[illegible]	[illegible]					[illegible]					
[illegible]	[illegible]	[illegible]	[illegible]	[illegible]	[illegible]	[illegible]					[illegible]					
[illegible]	[illegible]	[illegible]	[illegible]	[illegible]	[illegible]	[illegible]					[illegible]					
[illegible]	[illegible]	[illegible]	[illegible]	[illegible]	[illegible]	[illegible]					[illegible]					
[illegible]	[illegible]	[illegible]	[illegible]	[illegible]		[illegible]	[illegible]	[illegible]								
[illegible]	[illegible]	[illegible]	[illegible]	[illegible]	[illegible]	[illegible]	[illegible]					[illegible]		[illegible]		
[illegible]	[illegible]	[illegible]	[illegible]	[illegible]	[illegible]	[illegible]	[illegible]					[illegible]		[illegible]		
[illegible]	[illegible]	[illegible]	[illegible]	[illegible]	[illegible]	[illegible]	[illegible]					[illegible]		[illegible]		
[illegible]	[illegible]	[illegible]	[illegible]	[illegible]		[illegible]	[illegible]	[illegible]								
[illegible]	[illegible]	[illegible]	[illegible]	[illegible]	[illegible]	[illegible]	[illegible]	[illegible]	[illegible]							[illegible]
[illegible]	[illegible]	[illegible]	[illegible]	[illegible]		[illegible]	[illegible]	[illegible]								
[illegible]	[illegible]	[illegible]	[illegible]	[illegible]	[illegible]	[illegible]					[illegible]					
	[illegible]	[illegible]	[illegible]	[illegible]		[illegible]										
	[illegible]	[illegible]	[illegible]	[illegible]		[illegible]										
	[illegible]	[illegible]	[illegible]	[illegible]		[illegible]										
	[illegible]	[illegible]	[illegible]	[illegible]		[illegible]										
	[illegible]	[illegible]	[illegible]	[illegible]		[illegible]										
	[illegible]	[illegible]	[illegible]	[illegible]		[illegible]										
	[illegible]	[illegible]	[illegible]	[illegible]		[illegible]										
	[illegible]	[illegible]	[illegible]	[illegible]		[illegible]										
	[illegible]	[illegible]	[illegible]	[illegible]		[illegible]										
	[illegible]	[illegible]	[illegible]	[illegible]		[illegible]										
	[illegible]	[illegible]	[illegible]	[illegible]		[illegible]										

[illegible]	[illegible]	[illegible]	[illegible]	[illegible]	[illegible]	[illegible]
[illegible]	[illegible]	[illegible]	[illegible]	[illegible]	[illegible]	[illegible]
[illegible]	[illegible]	[illegible]	[illegible]	[illegible]	[illegible]	[illegible]
[illegible]	[illegible]	[illegible]	[illegible]	[illegible]	[illegible]	[illegible]
[illegible]		[illegible]	[illegible]		[illegible]	[illegible]

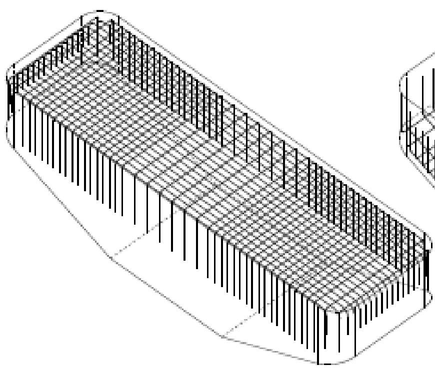

3D-VIEW

SCALE: 1/4"=1'-0"

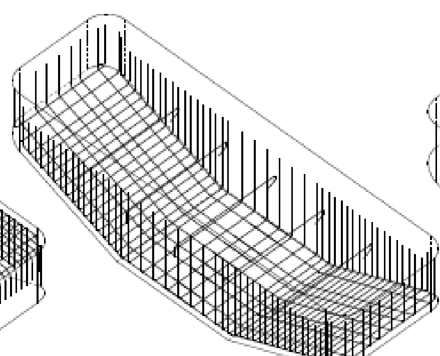

3D-VIEW

SCALE: 1/4"=1'-0"

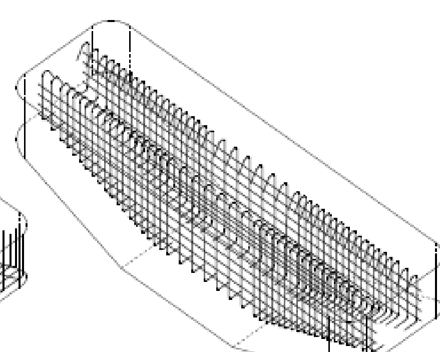

3D-VIEW

SCALE: 1/4"=1'-0"

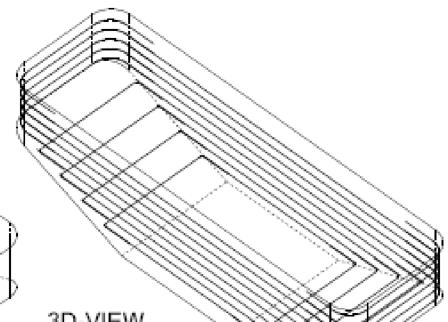

3D-VIEW

SCALE: 1/4"=1'-0"

PIER LOCATIONS

87,89,90,91,92,93,94,
95,96,98,99,100,101,102

NOTES:

1.ALL LAPS ARE 2'-02"
2.COVER=2" ALL AROUND
3.ALL REINFORCING TO BE GRADE 60 A615 REBAR
4.DESIGN PACKAGE DP-030

LEGENDS:

1. T1-TOP 1st LAYER
2. T2-TOP 2nd LAYER
3. T3-TOP 3rd LAYER
4. T4-TOP 4th LAYER
5. B1-BOTTOM 1st LAYER
6. B2-BOTTOM 2nd LAYER
7. SB-SIDE BAR
8. EF-EACH FACE
9. ES-EACH SIDE
10. FB-FACE BAR
11.INNER LONGITUDINAL

REV #:	DATE:	SENT FOR:	COMMENTS:
3	11/27/2014	APPROVAL	Revised as per EOR [illegible]
[illegible]	[illegible]	APPROVAL	Revised as per EOR [illegible]
[illegible]	[illegible]	APPROVAL	[illegible]
0	[illegible]	APPROVAL	

ALL REINFORCING SHOWN IS ASTM A615, GRADE 60 U.N.O.

THIS IS A REBAR PLACING DRAWING ONLY. THIS DRAWING IS TO BE USED WITH THE CONTRACT DRAWINGS (ARCHITECTURAL, STRUCTURAL AND SPECIFICATIONS). DIMENSIONS SHOWN ON THIS DRAWING ARE FOR DETAILING PURPOSES ONLY. DO NOT USE FOR OTHER TRADES. THIS DRAWING SHOULD NOT BE SCALED.

IMPERIAL / SOFT METRIC

DRAWING DESCRIPTION

CAPITAL RAIL CONSTRUCTORS
DULLES CORRIDOR METRORAIL
HERNDON, VA
REINFORCEMENT DETAILS OF PIER TYPE H1

JOB #: 1423400040

DRAWING: RS4C-10